General Guide

The following guide illustrates how Wundafloor warm water underfloor heating systems can be coupled together with the majority of central heating plumbing and control systems.

The majority of modern central heating systems make use of motorised valves, often called Zone valves, to divide different heating systems and hot water generation ie. Radiators, Under Floor Heating and Hot water cylinder.

Systems using combination boilers will also need zone valves if separate systems of heating require different times and temperatures.

Quite often ground and first floors are controlled separately as they may have different uses. The zone valve acts like a relay, meaning any system can call the boiler/ heat source without other areas being activated.

If the underfloor system is being encorporated alongside a radiator system it is even more important that these areas are controlled independently as 'heat up' and 'cooling off' times are different. We recommend the 'S' plan layout is adopted as this allows for more variety in zoning, and should be very familiar to qualified plumber/ electricians. The schematics show typical S-plan heating systems with under floor heating encorporated.

NOTE:
An Auto By-Pass valve (ABV) should be incorporated in all systems.

NOTE:
If a Heat pump manifold has been supplied then there will be no pump on the manifold. Therefore the relay on the H-Box wiring centre is used to switch on a shunt pump which will send primary water from a buffer tank or the heatpump itself to the manifolds.

Wundafloor does not supply:

- 'S' plan wiring centre
- Cylinder thermostat
- Hot water time clock
- Auto bypass valve

Motorised / Zone valves and Pipe stats are available if requested.

Plumbing and Wiring Schematics

Section A
System Boiler with hot water cylinder, radiators & UFH
1a) Plumbing Schematic
2a) Multi Zone Wiring Schematic
3a) Single Zone Wiring Schematic

Section B
Combination Boiler with radiators & UFH
1b) Plumbing Schematic
2b) Multi Zone Wiring Schematic
3b) Single Zone Wiring Schematic

Section C
Adding Single Zone kit to exisiting radiator system
1c) Plumbing Schematic
2c) Wiring Schematic
3c) Plumbing Schematic (Danfoss kit)

Section D
H-Box-12 Wiring Schematics
1d) H-Box-12 V1.2
2d) H-Box-12 (previous model)

Section E
Installing a Wet Room Thermostat

Section F
Schematic - Wireless Control Centre E8.583RF

Section G
Schematic - Wireless Receiver (single zone) E8.413RF / E8.423RF

Revision Date: 5/10/2017

Section A

1A : Schematic - System Boiler with hot water cylinder, radiators & UFH

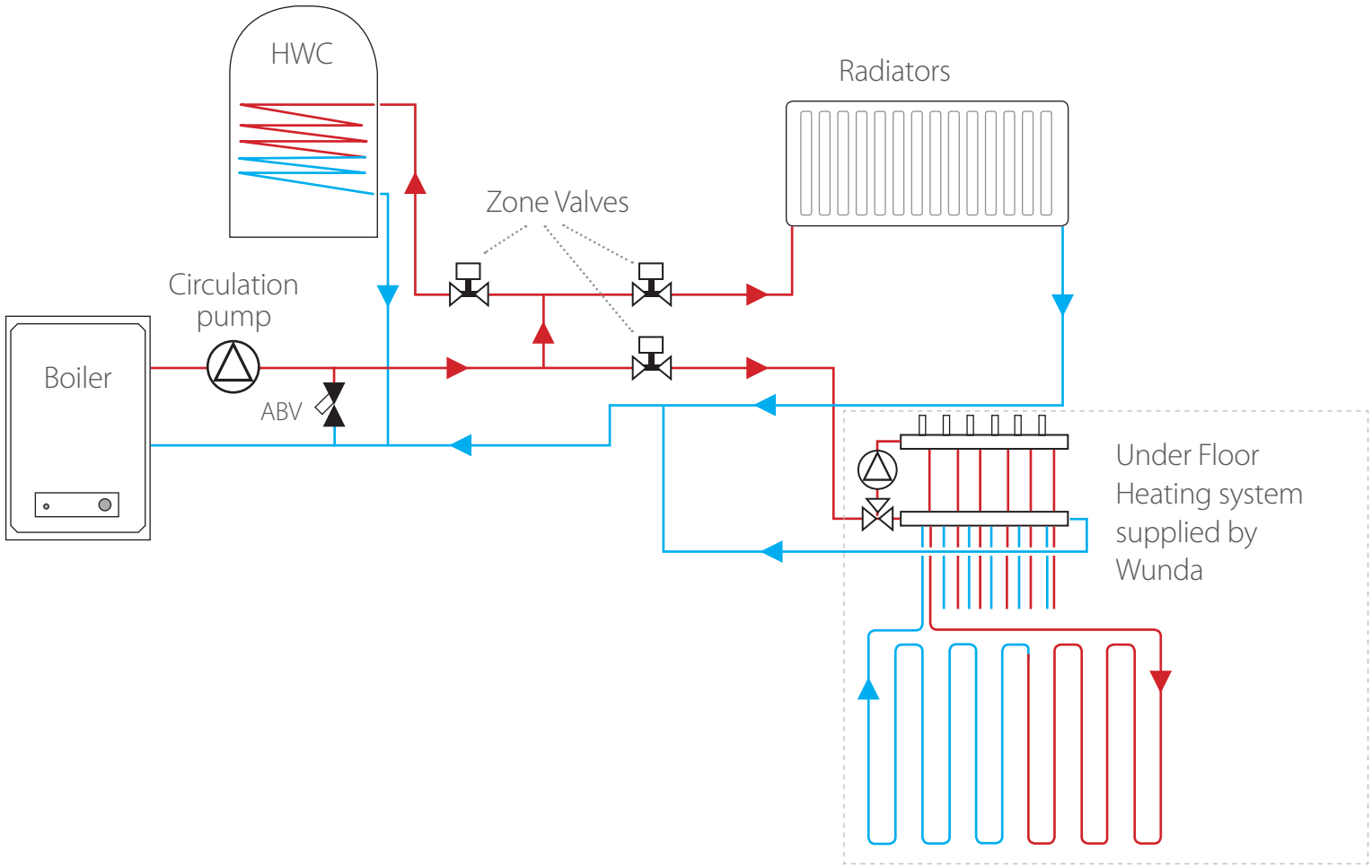

Section A

2A : Typical wiring scheme for multi-zone UHF system with a System Boiler

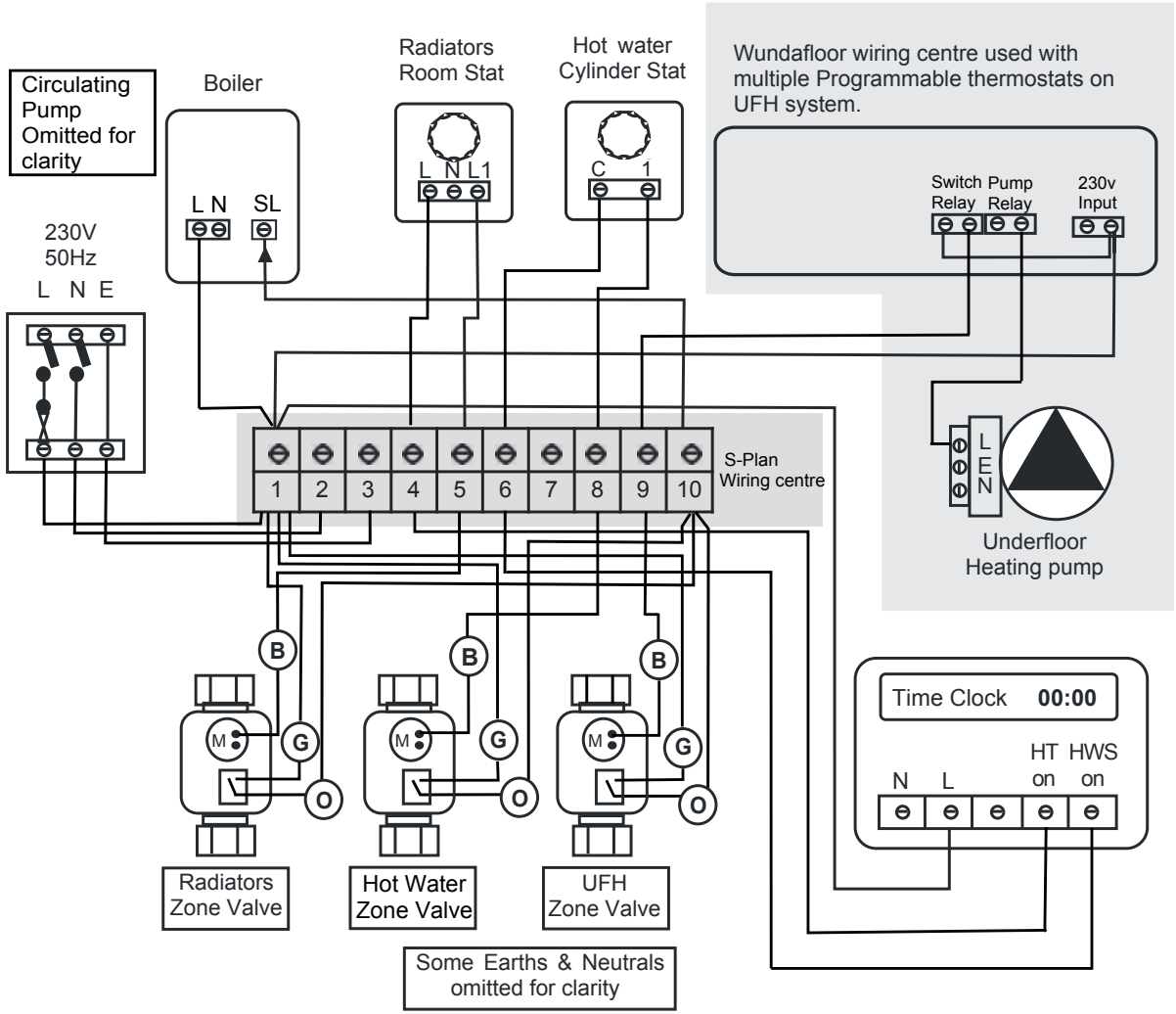

This drawing is for guidance only.
All installations should be undertaken by a qualified person only.

Wiring Key	
O	Orange
G	Grey
B	Brown

Revision Date: 5/10/2017

Section A 3A : Typical wiring scheme for single zone UHF system with a System Boiler

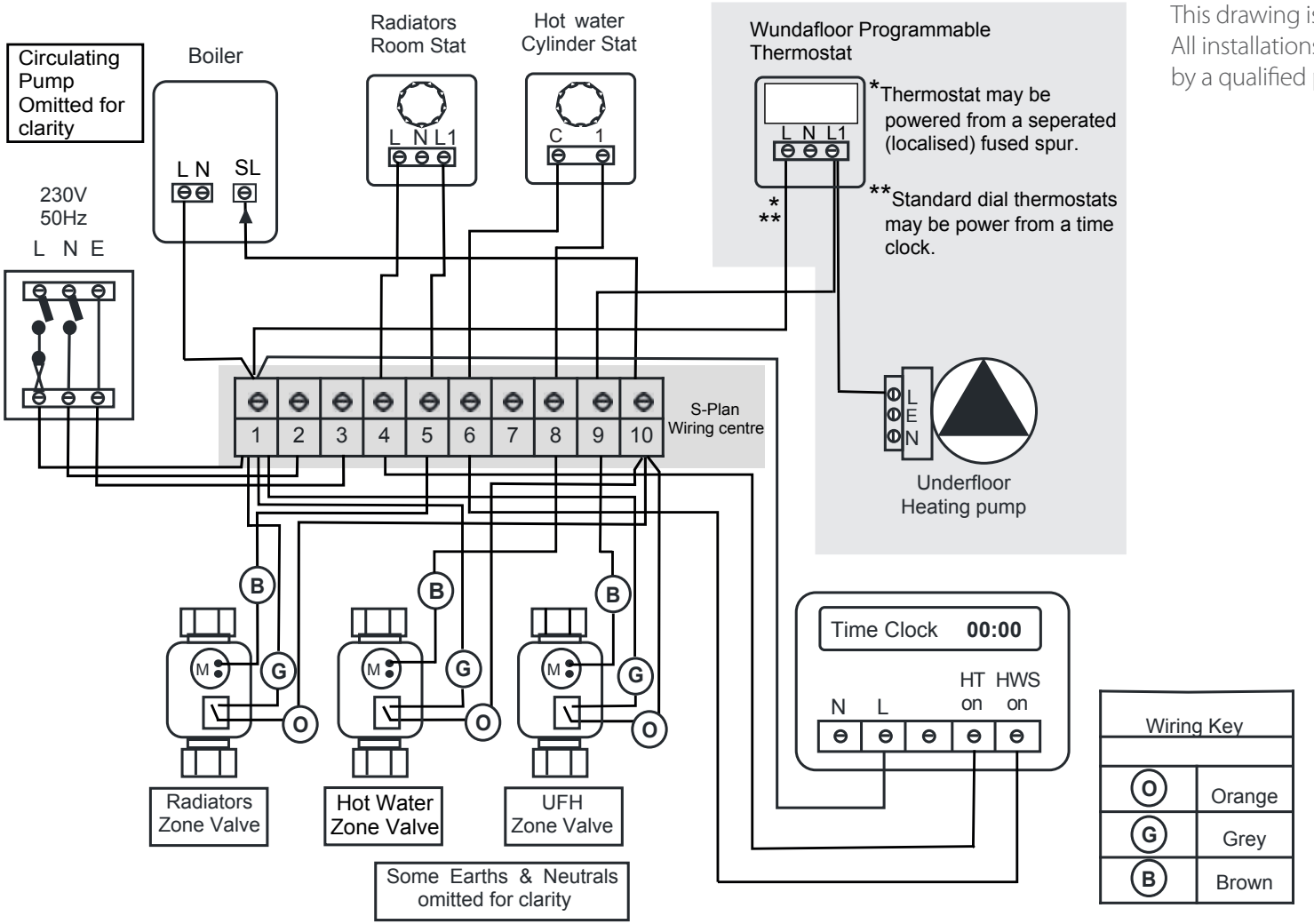

This drawing is for guidance only. All installations should be undertaken by a qualified person only.

Section B 1B : Schematic - Combination Boiler with Radiators & UHF

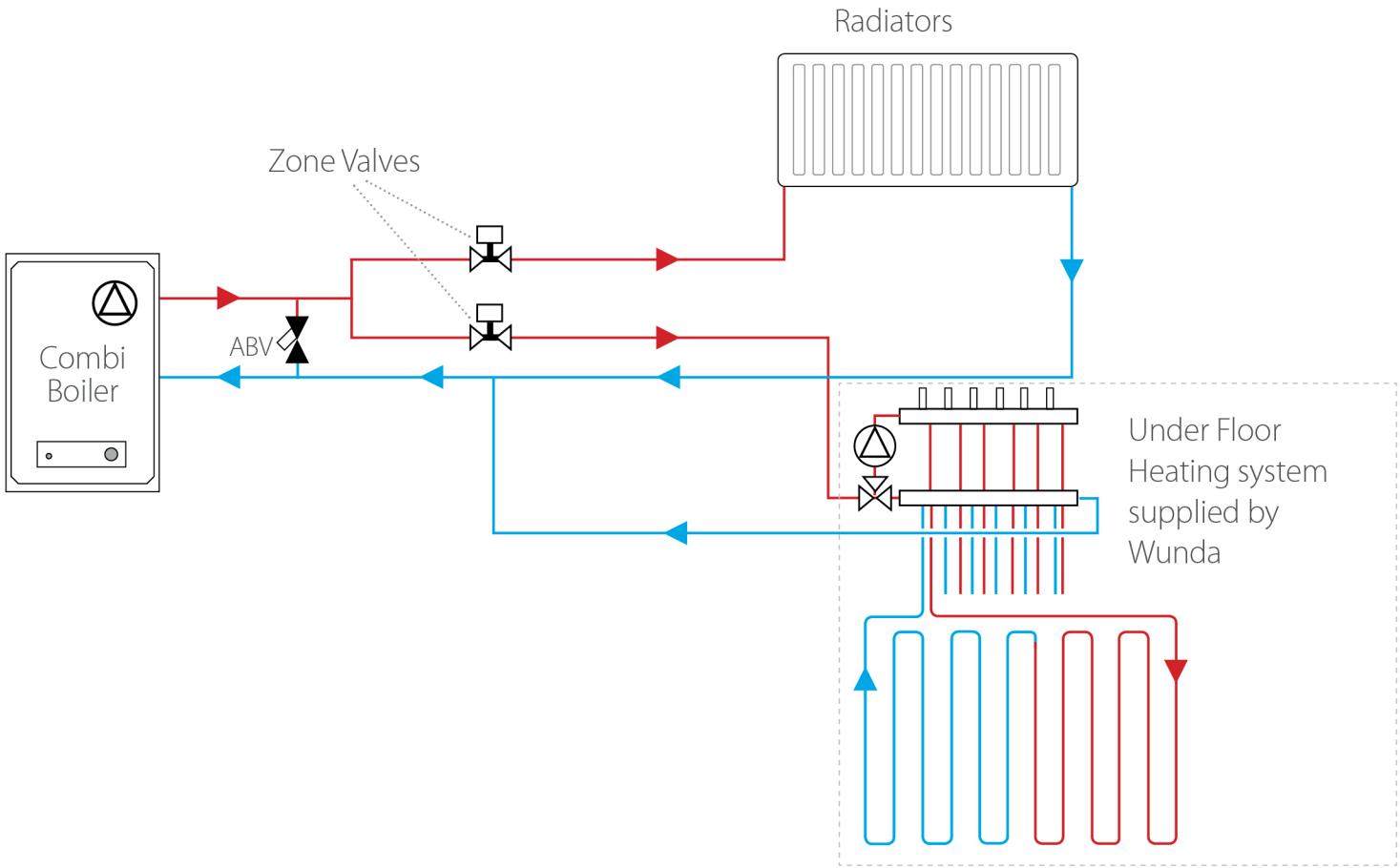

Section B 2B : Typical wiring scheme for multi zone UHF system with a Combination Boiler

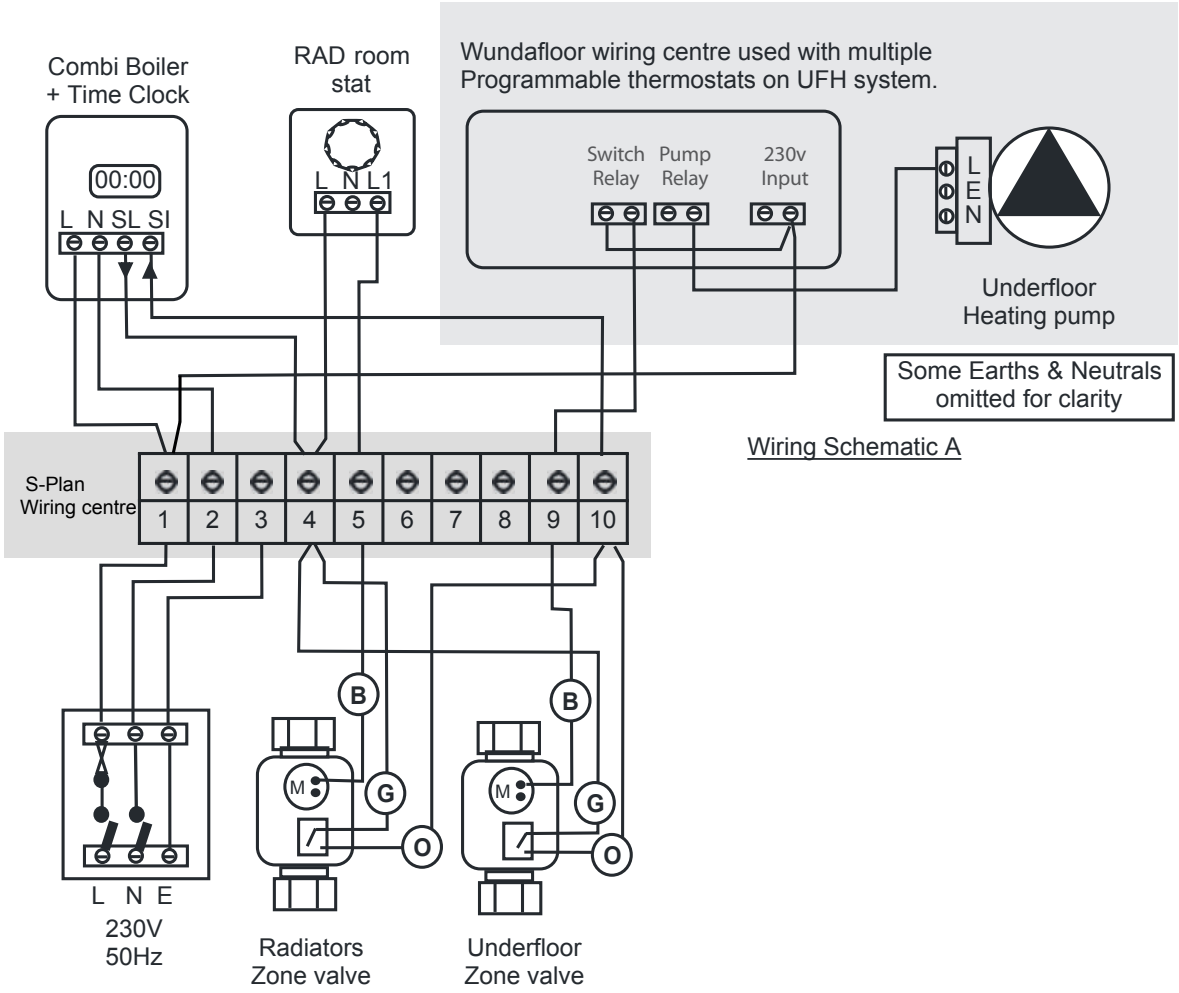

This drawing is for guidance only.
All installations should be undertaken by a qualified person only.

Wiring Key	
O	Orange
G	Grey
B	Brown

Section B 3B : Typical wiring scheme for single zone UHF system with a Combination Boiler

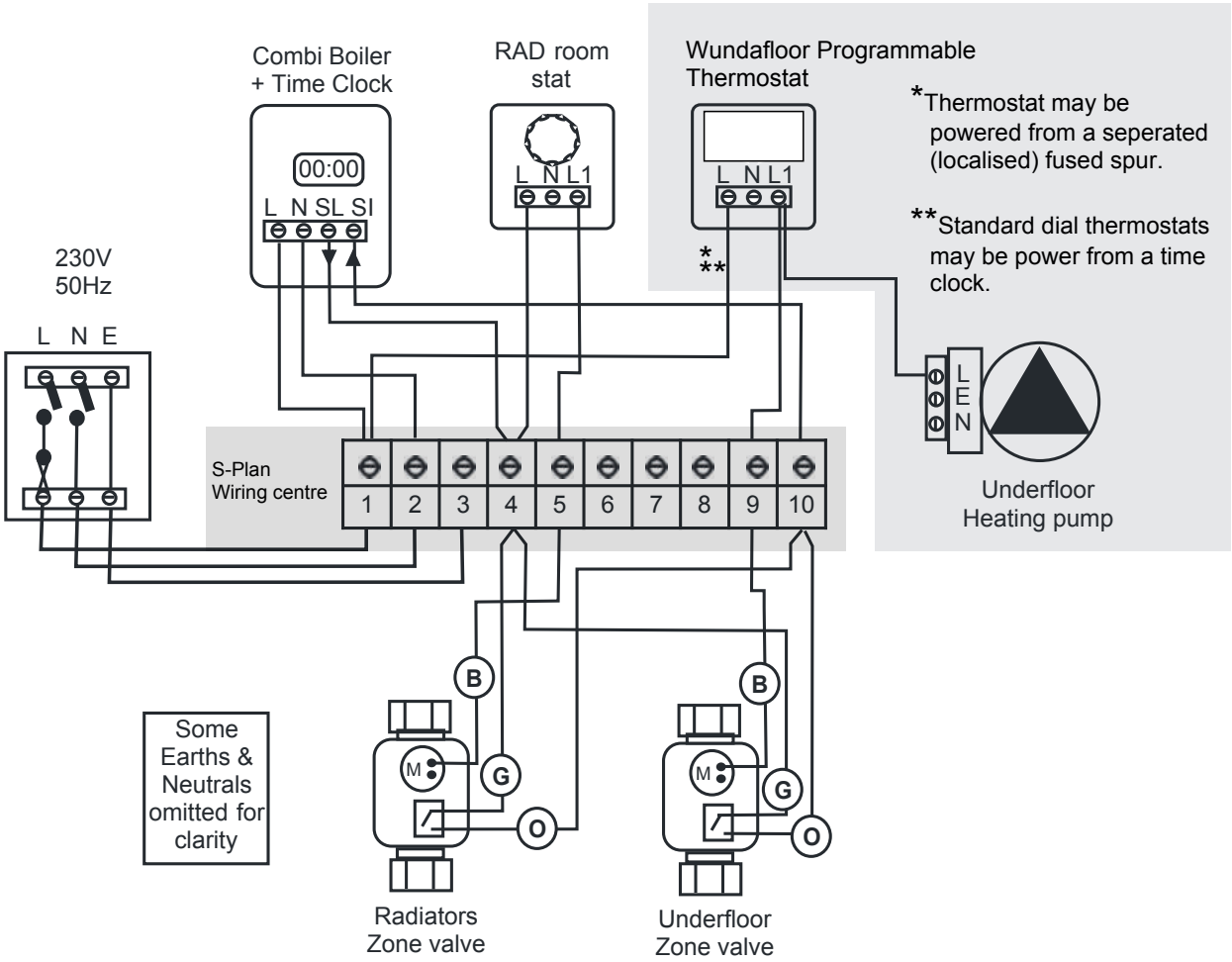

This drawing is for guidance only.
All installations should be undertaken by a qualified person only.

Wiring Key	
O	Orange
G	Grey
B	Brown

Section C 1C : Schematic - Adding single area UFH to an existing radiator system

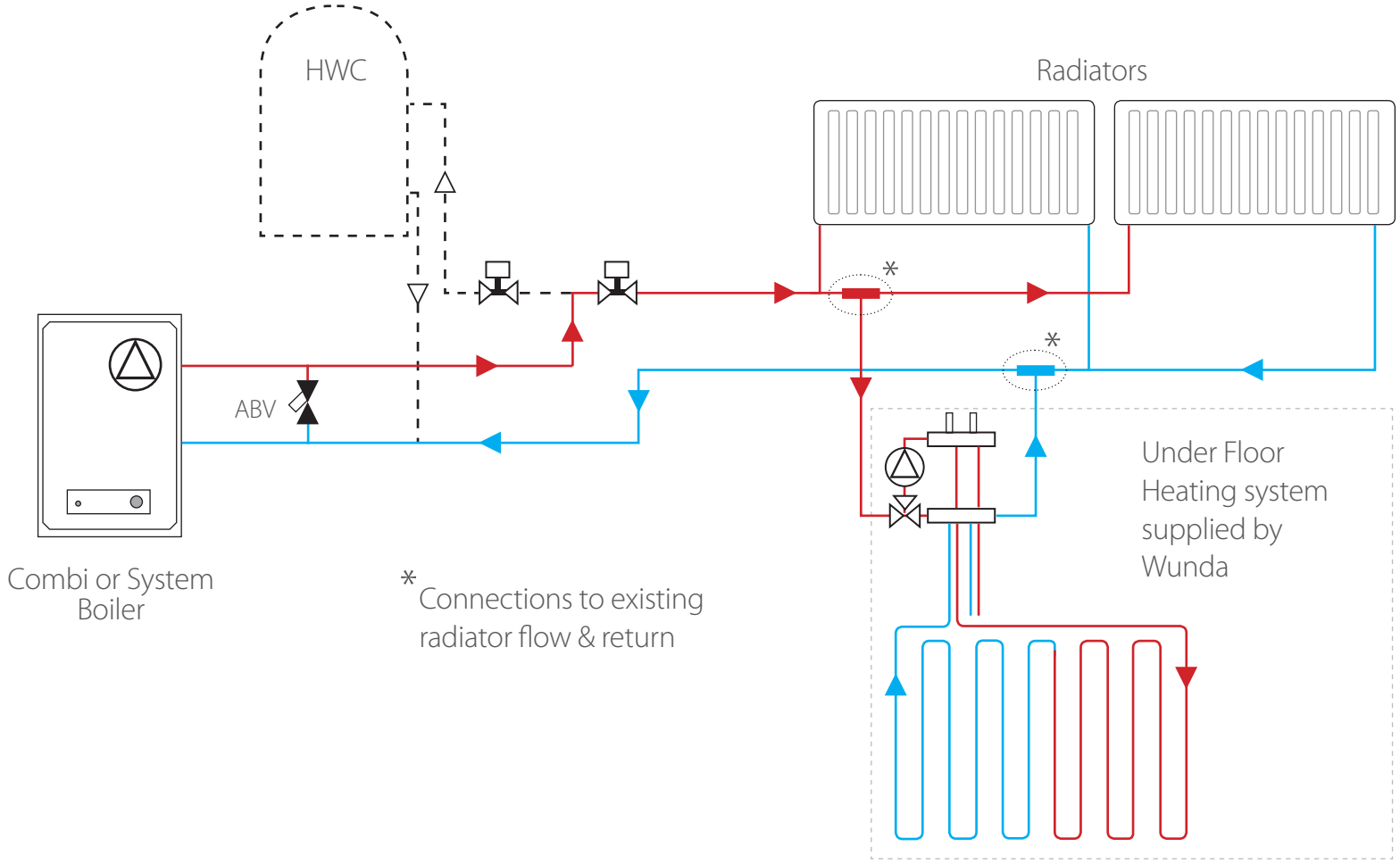

Section C 2C : Wiring schematic for single zone kit added to radiator system

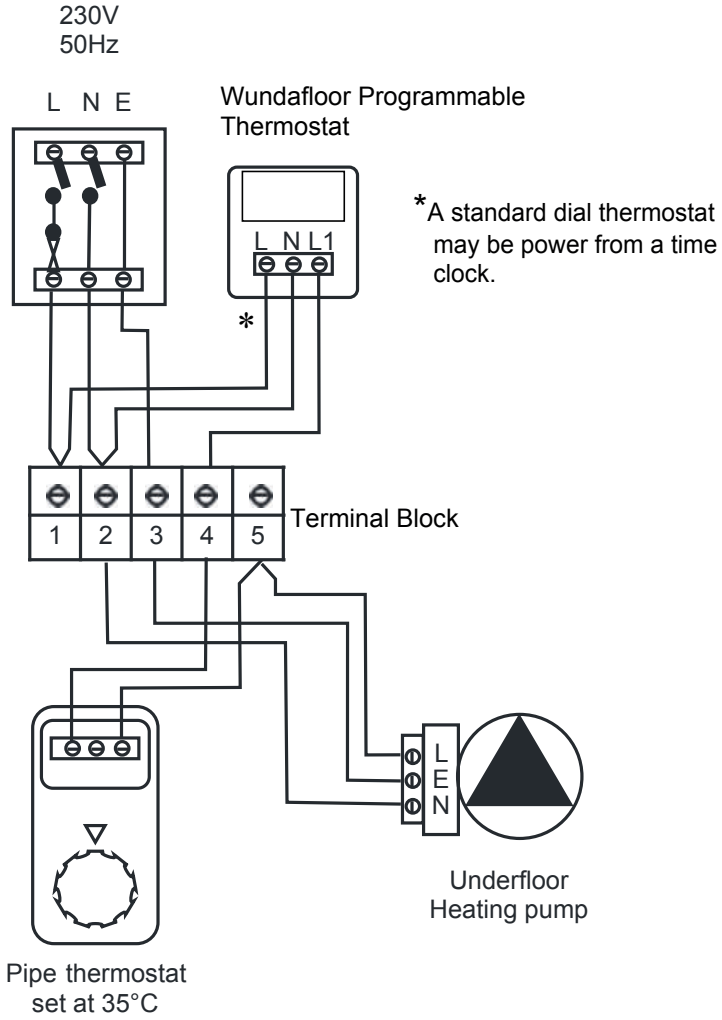

This is when a single zone underfloor heating kit is connected to an existing radiator system without an individual zone valve for the UFH and therefore unable to call the boiler/heat source independently for heat.

Although a room thermostat or programmable thermostat can be used to control air temperature, this area can only be ON when the existing heating system is ON.

When this is the case, a pipe thermostat can be attached to the heating mains flow, so that the new area of the underfloor knows when hot water is available and therefore stops the pump running when no heat is available.

This drawing is for guidance only.
All installations should be undertaken by a qualified person only.

Section C

3C : Schematic - Danfoss FHV-R Kit to an existing radiator system

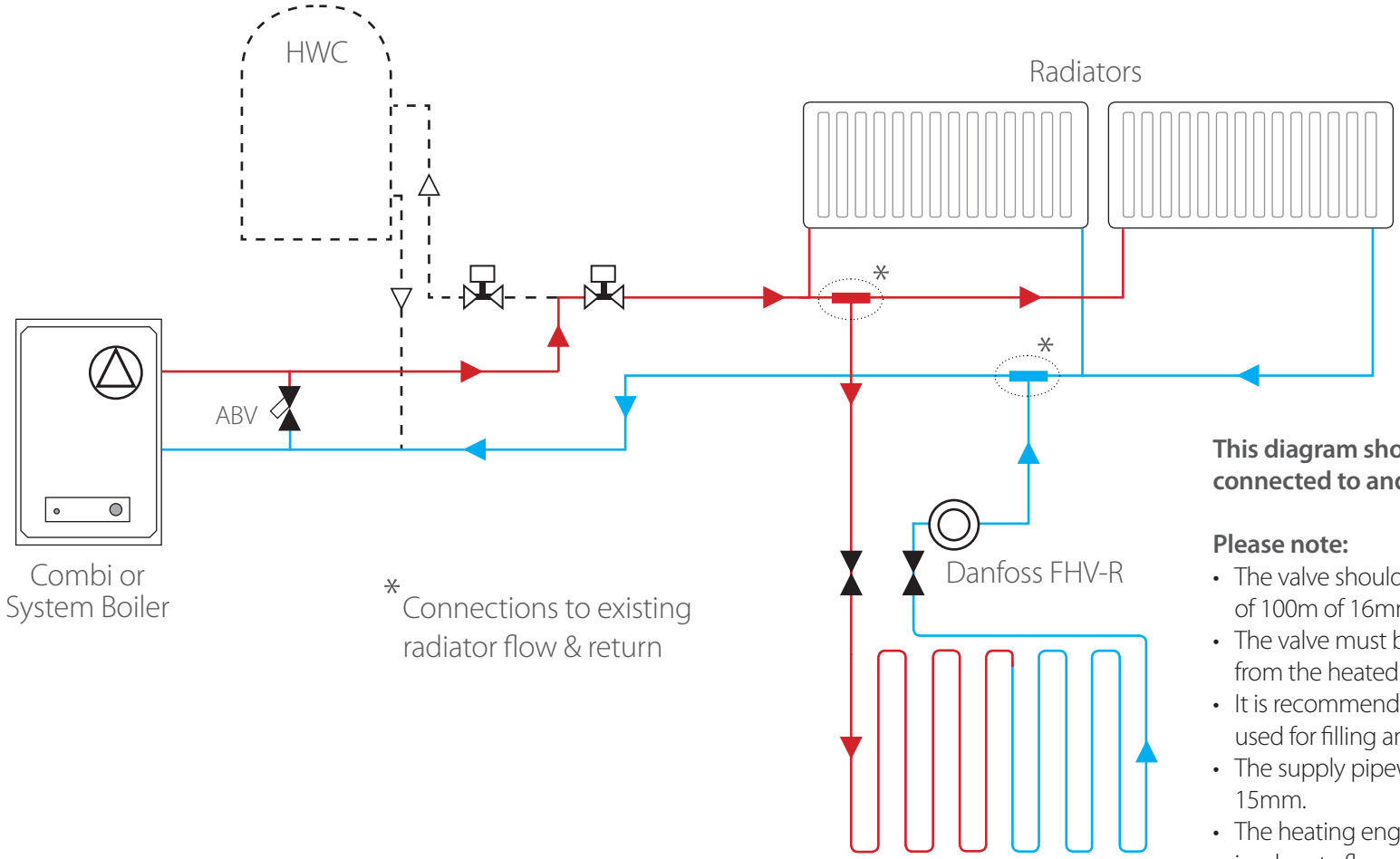

This diagram show how a Danfoss FHV-R is connected to and existing radiator system.

Please note:

- The valve should be used with a maximum of 100m of 16mm Wundapipe.
- The valve must be positioned on the return from the heated floor.
- It is recommended that isolation valves are used for filling and maintenance.
- The supply pipework must not be less than 15mm.
- The heating engineer must check that the is adquate flow available from the heating mains.

Section D 1D : Schematic - Wiring Centre - H-Box-12 V1.2 PCB version H-Box-12 V1.4 (Current model)

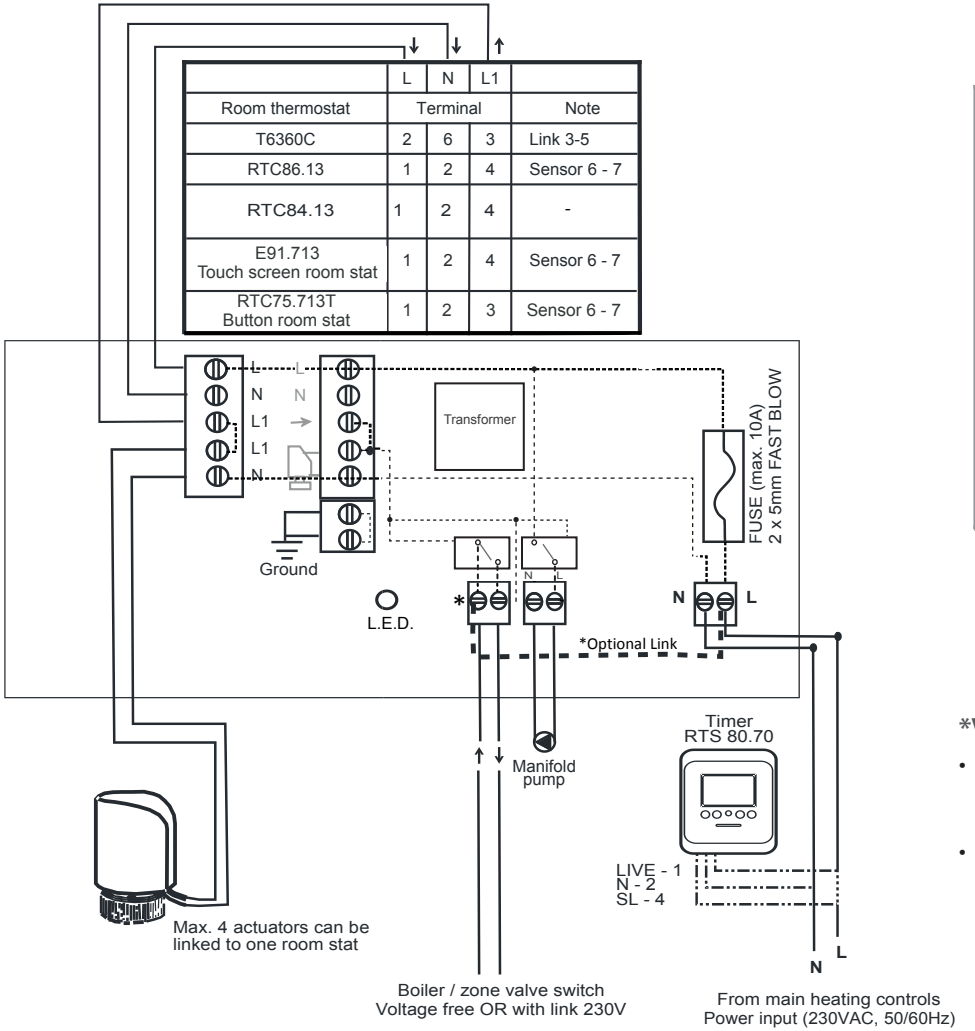

(Identifiable by model no. H-box212_V1.4 on PCB)

Technical Data.	
Supply voltage	230V AC, 50/60Hz
Output voltage	230V AC,50/60Hz
Max.Load	4A
Number of zone outputs	12 zones
Relay Output (2 minutes delay)	Left Hand: 1 x potential free relay output Right Hand:1 x independent relay output (230V AC, 3A) Two Relays will be engaged whenever one or more thermostats call for heating. The relays will be disengaged when all the zone thermostats stop heating activity
Ambient temperature	0°C-50°C
Dimension (mm)	310 W x 110 H x 55 D

*Voltage Free Switch

- With Optional Link fitted - Can be used as a 230v switch live output to zone valve or boiler/heat source
- Without Optional Link fitted - Can be used as low voltage switching for Boiler/heat source

Section D 2D : Schematic - Wiring Centre - H-Box-12 V1.2 (Previous model)

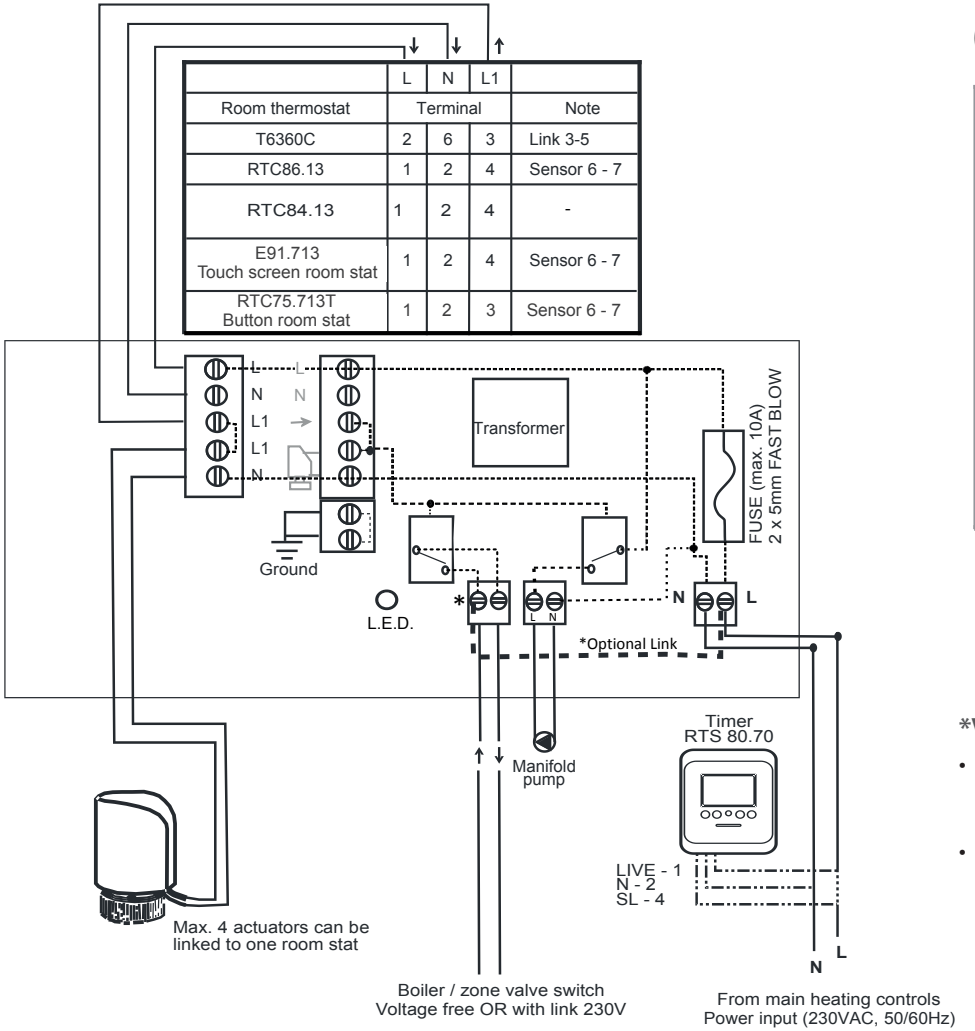

Room thermostat	Terminal L	Terminal N	Terminal L1	Note
T6360C	2	6	3	Link 3-5
RTC86.13	1	2	4	Sensor 6 - 7
RTC84.13	1	2	4	-
E91.713 Touch screen room stat	1	2	4	Sensor 6 - 7
RTC75.713T Button room stat	1	2	3	Sensor 6 - 7

(Identifiable by model no. ZDA0003-V1.2)

Technical Data.	
Supply voltage	230V AC, 50/60Hz
Output voltage	230V AC,50/60Hz
Max.Load	4A
Number of zone outputs	12 zones
Relay Output (2 minutes delay)	Left Hand: 1 x potential free relay output Right Hand:1 x independent relay output (230V AC, 3A) Two Relays will be engaged whenever one or more thermostats call for heating. The relays will be disengaged when all the zone thermostats stop heating activity
Ambient temperature	0°C-50°C
Dimension (mm)	310 W x 110 H x 55 D

*Voltage Free Switch

- With Optional Link fitted - Can be used as a 230v switch live output to zone valve or boiler/heat source
- Without Optional Link fitted - Can be used as low voltage switching for Boiler/heat source

Section D 3D : Schematic - Wiring Centre - H-Box-12 (Old model) - no LED on PCB)

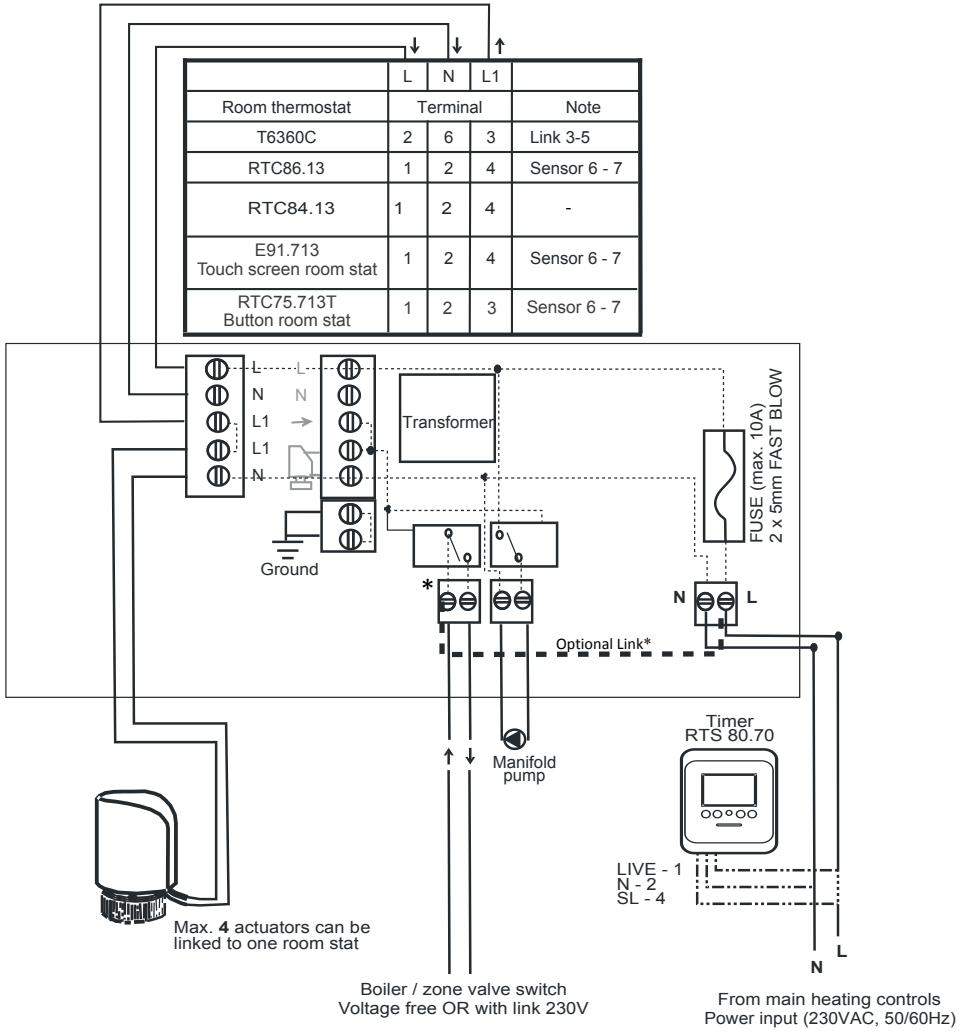

	L	N	L1	
Room thermostat	Terminal			Note
T6360C	2	6	3	Link 3-5
RTC86.13	1	2	4	Sensor 6 - 7
RTC84.13	1	2	4	-
E91.713 Touch screen room stat	1	2	4	Sensor 6 - 7
RTC75.713T Button room stat	1	2	3	Sensor 6 - 7

Technical Data.	
Supply voltage	230V AC, 50/60Hz
Output voltage	230V AC,50/60Hz
Max.Load	4A
Number of zone outputs	12 zones
Relay Output (2 minutes delay)	Left Hand: 1 x potential free relay output Right Hand:1 x independent relay output (230V AC, 3A) Two Relays will be engaged whenever one or more thermostats call for heating. The relays will be disengaged when all the zone thermostats stop heating activity
Ambient temperature	0°C-50°C
Dimension (mm)	310 W x 110 H x 55 D

*Voltage Free Switch

- With Optional Link fitted - Can be used as a 230v switch live output to zone valve or boiler/heat source
- Without Optional Link fitted - Can be used as low voltage switching for Boiler/heat source

Section E Installing Wet Room Thermostats

Unit can be used as a floor temperature sensor or an air temperature sensor.

*Bathroom Stat

3000mm Probe

Probe Housing

* models: RTC86.13, RTC75.713T & E91.713 can be used with a probe

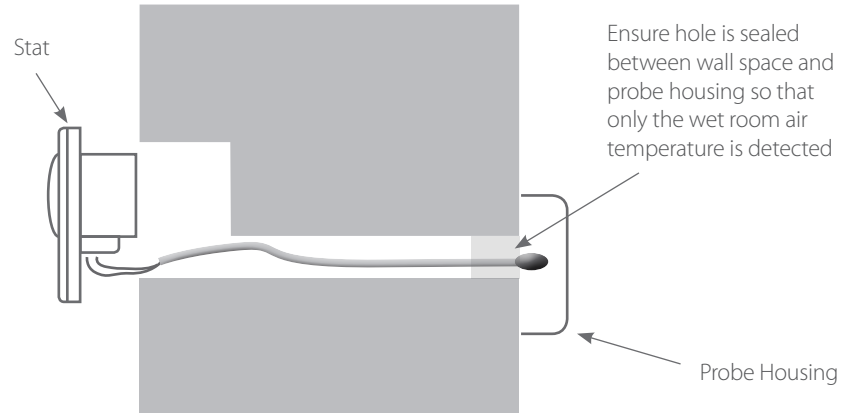

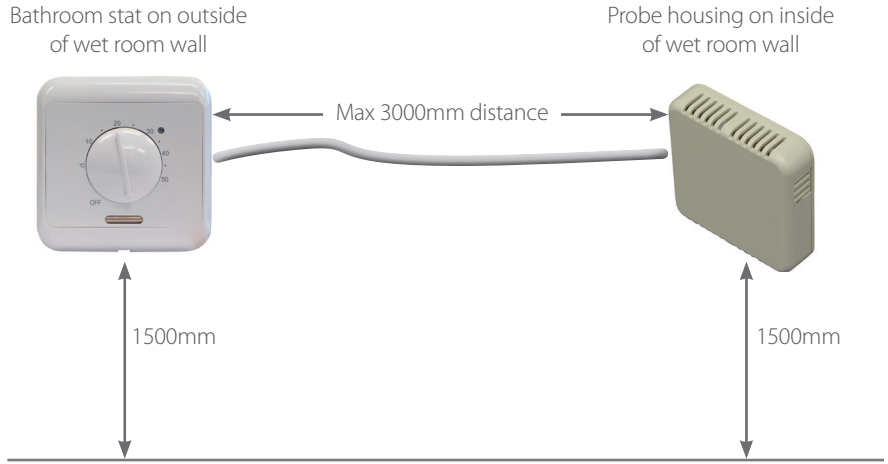

For floor temperature sensing, place probe midway between pipe circuit runs to monitor average floor temperature.

For air temperature, place unit on outside wall of wet room in desired location at height of 1500 mm from floor level.

Check distance between thermostat's terminal block and probe casing location of wet room's interior wall is no more than 3 metres.

Do not trim probe sensor to length to ensure the probe wire is long enough to span the distance between the unit's terminal block, to go through prepared hole through wall and exit into supplied probe housing fixed onto interior wall of wet room at 1500 mm from wet room floor level.

Section F Schematic - Wireless Control Centre E8.583RF

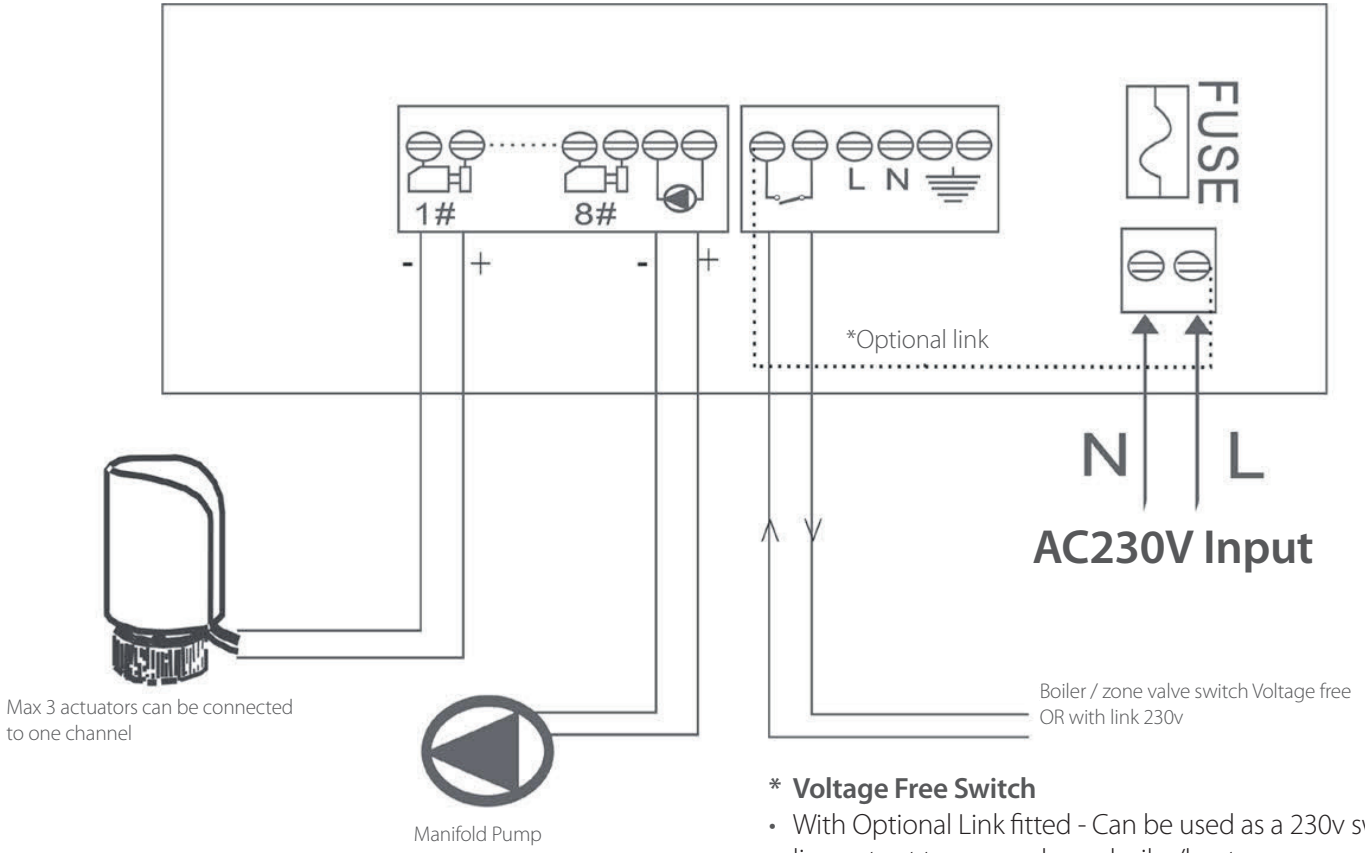

Technical Data
Voltage : AC230V
Current : Max 3A
Wireless Frequency Output: 433Mhz
Effective Transmission Distance: 200m empty space
Ambient Temperature : -5~50°C
Pump Linkage: 230V sub-output
Boiler/Zone Valve Linkage: Volt free or 230V with link
Protective Housing: Ip40
Weight : 1 KG

NOTE:
Pump and switch relays have a 3 minute delay.

*** Voltage Free Switch**

- With Optional Link fitted - Can be used as a 230v switch live output to zone valve or boiler/heat source
- Without Optional Link fitted - Can be used as low voltage switching for Boiler/heat source

Section G Schematic - Wireless Receiver (single zone) E8.413RF / E8.423RF

E8.413RF

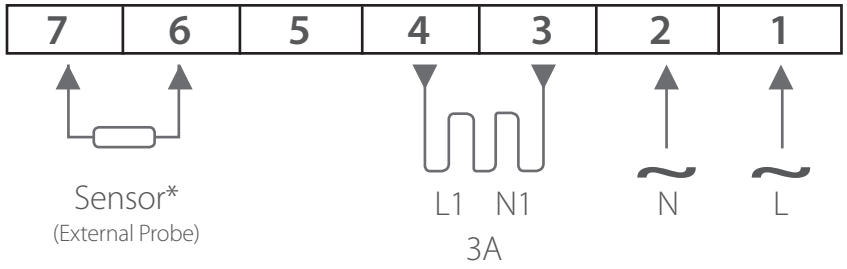

E8.423RF

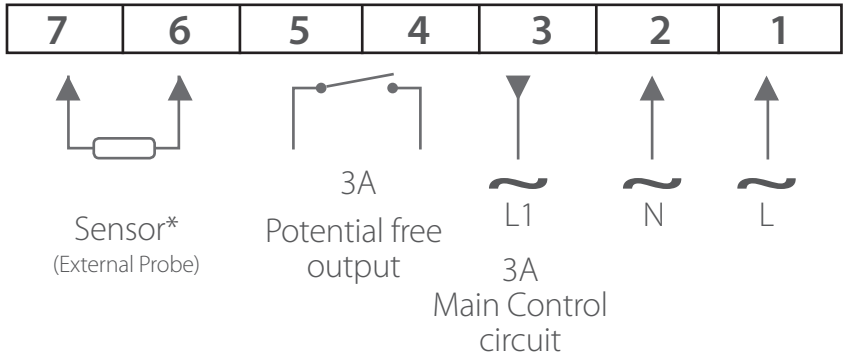

Technical Data
Voltage : AC230V
Current : Max 3A
Wireless Frequency Output: 433Mhz
Effective Transmission Distance: 200m empty space
*External Limitation Value: 30°C, 40°C and 50°C if external probe is fitted. (Factory setting 30°C)
Limitation Switch Differential: -2°C
Ambient Temperature: -5°C – 50°C
Protective housing: Ip20
Housing Material: Anti Flammable PC

*OPTIONAL (not supplied with receiver)